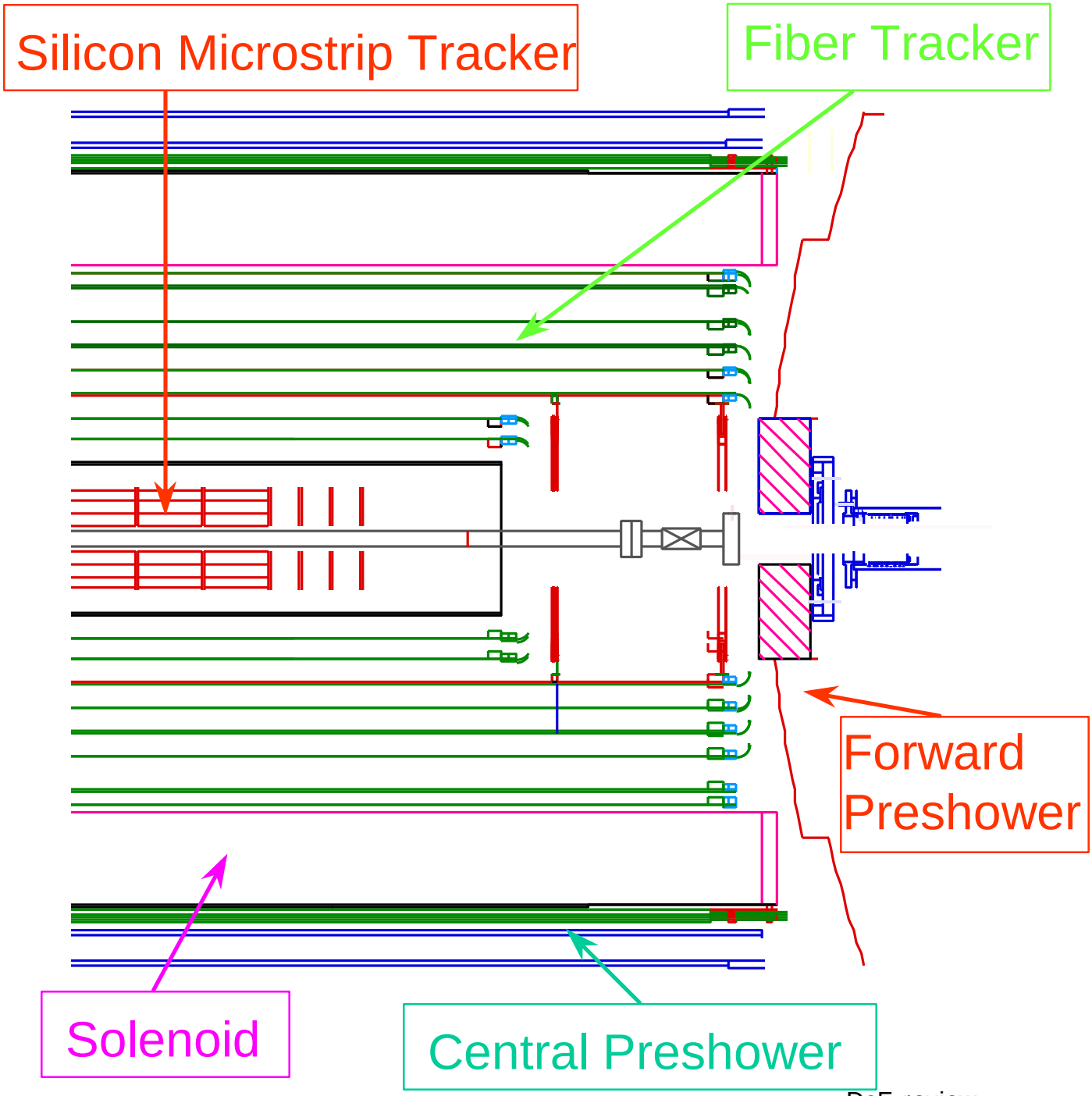Tracking System