BLS Trigger Sum

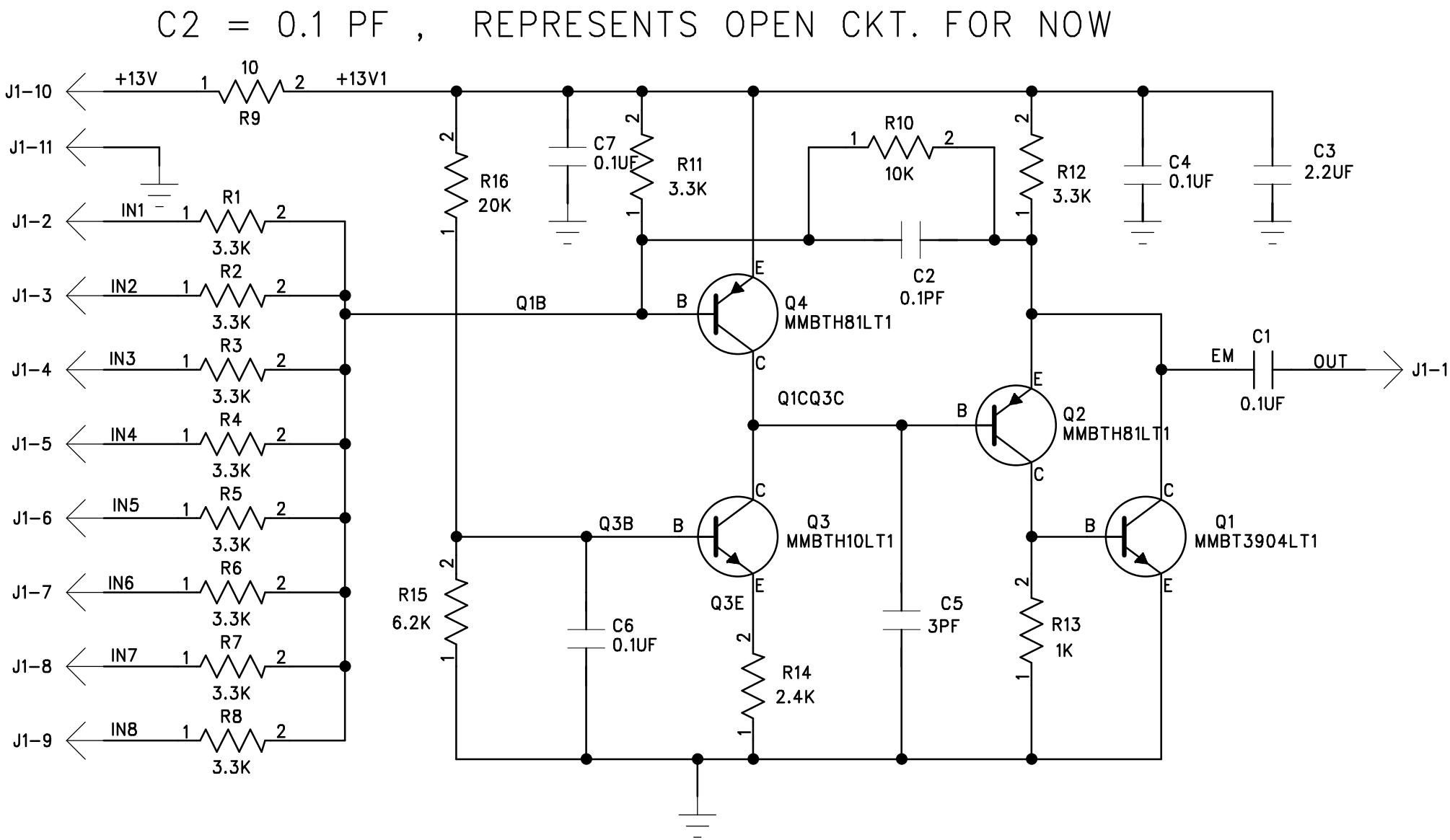


TrgSum.sch-1 - Thu Aug 03 16:27:27 2000