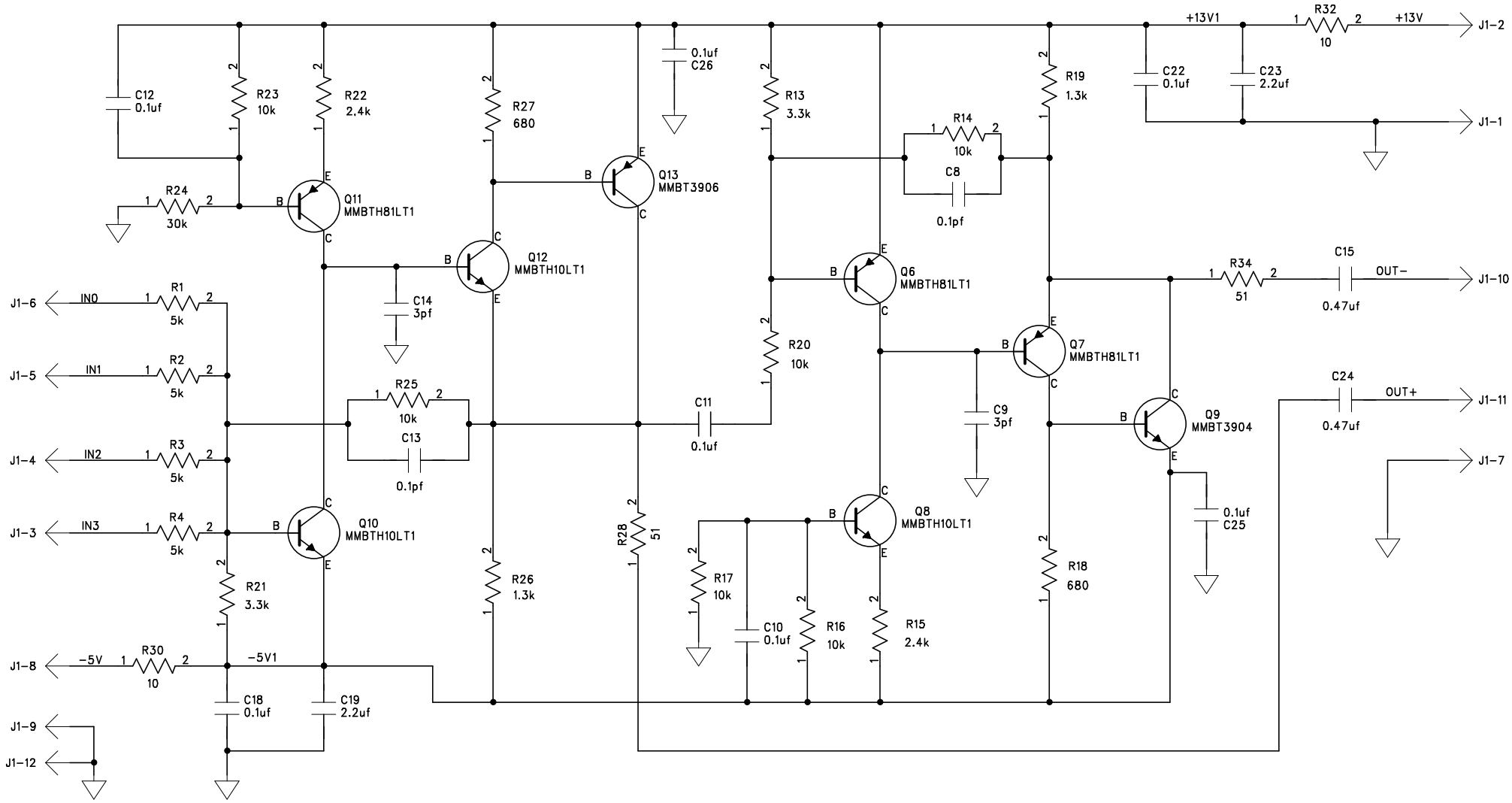BLS Trigger Driver